Mounting rail "Click-in" P3010, 4 pump modules, 0104278

- Available in several versions.
- Up to four pumps can be docked to a single rail.

Общее

Материал	**SS, Al**
Temperature	**-10 – 50 °C**
Weight	**33 – 89 g**
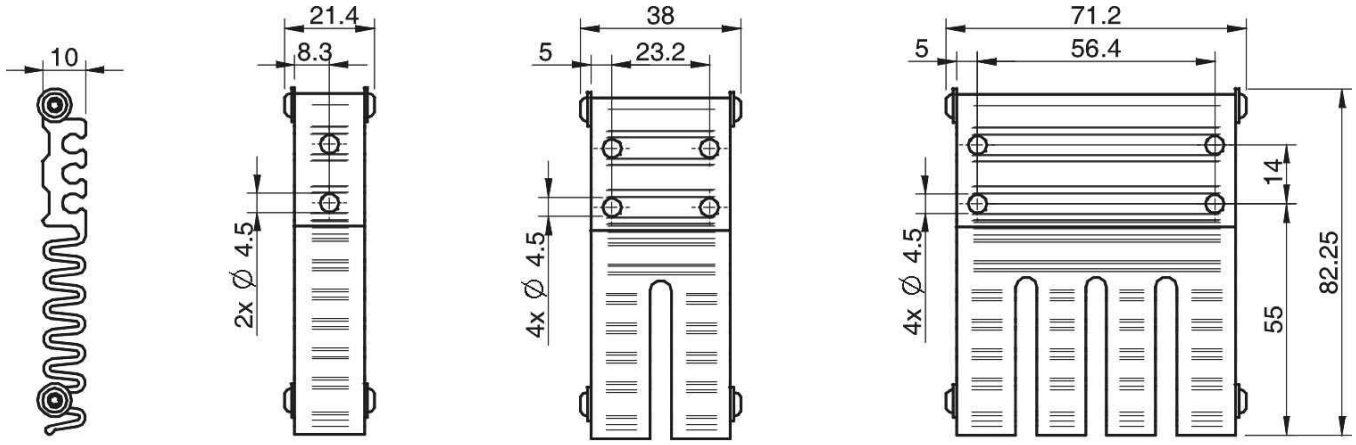
Масштабные чертежи